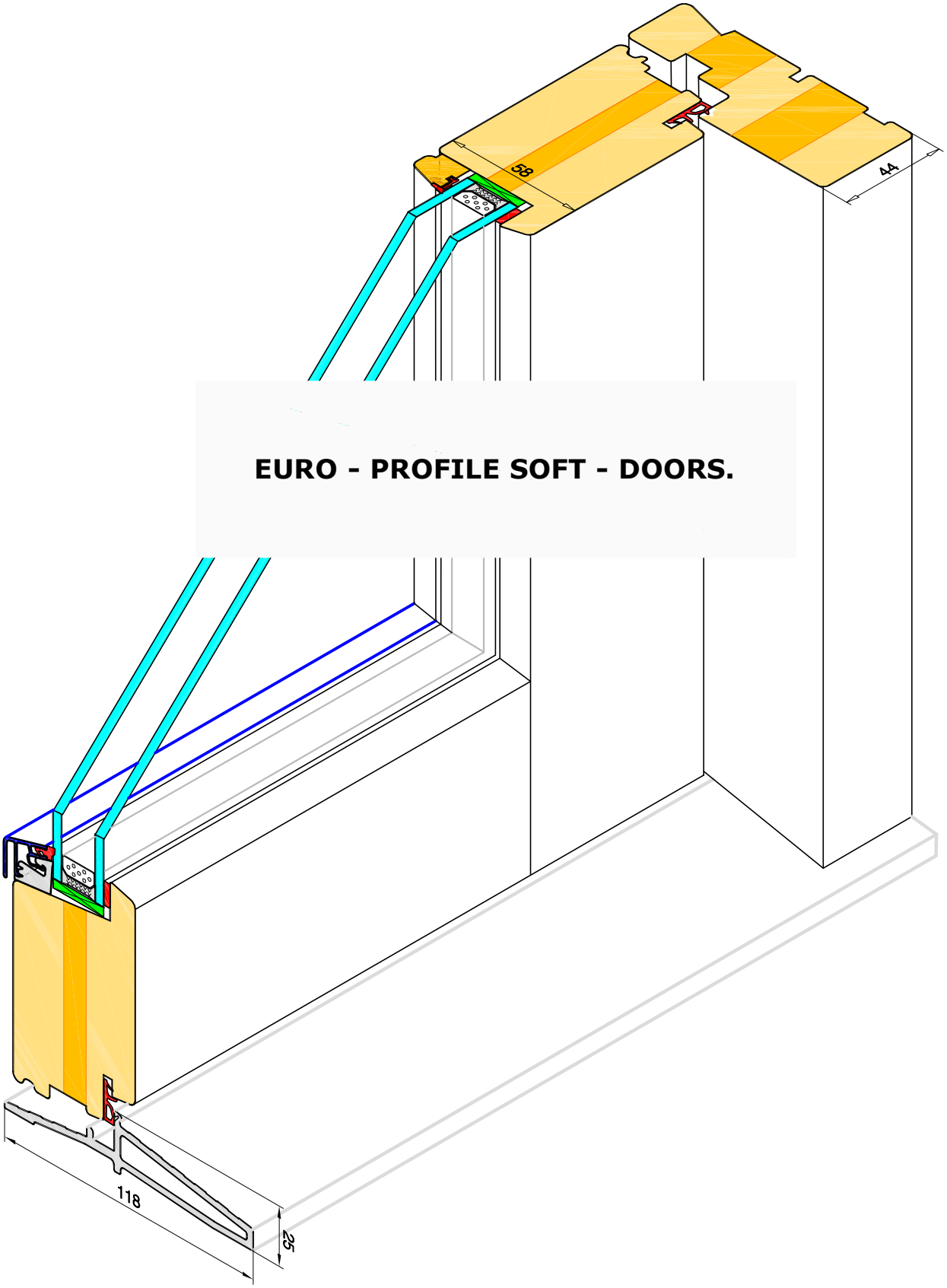

EURO - PROFILE SOFT - DOORS.

EURO - Profile SOFT - DOOR OUTWARD OPENABLE

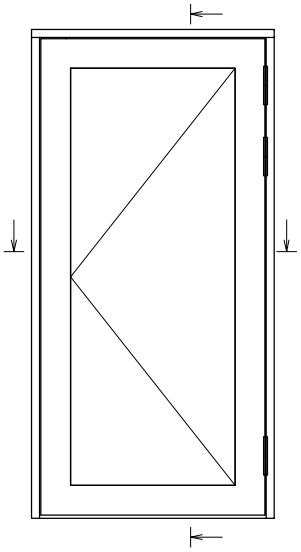

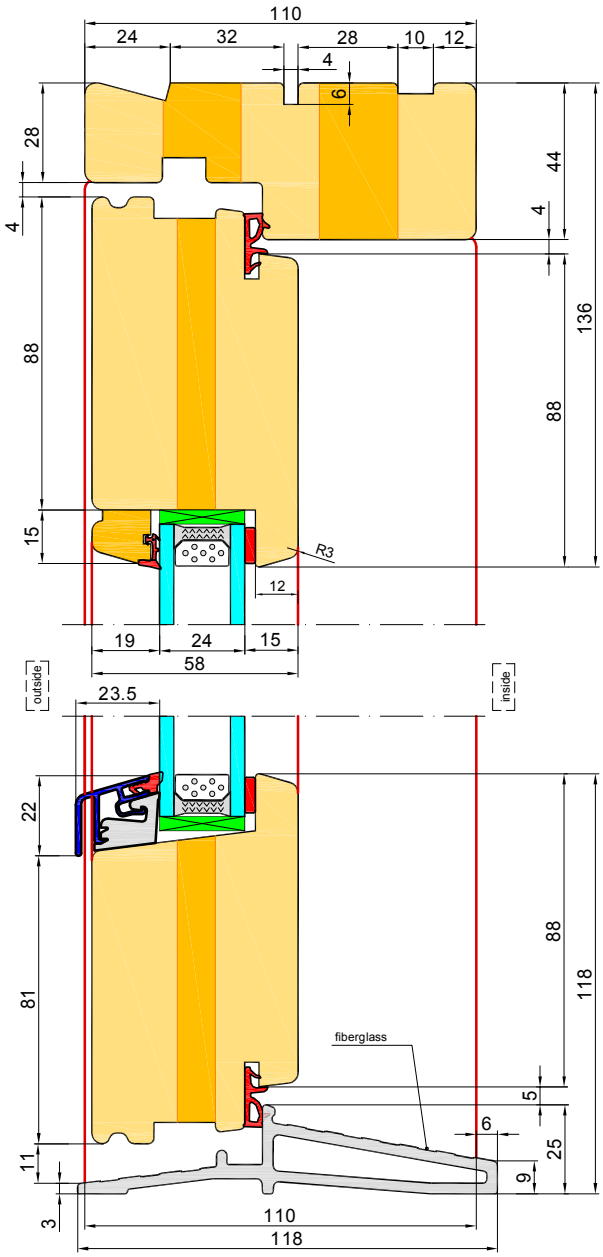

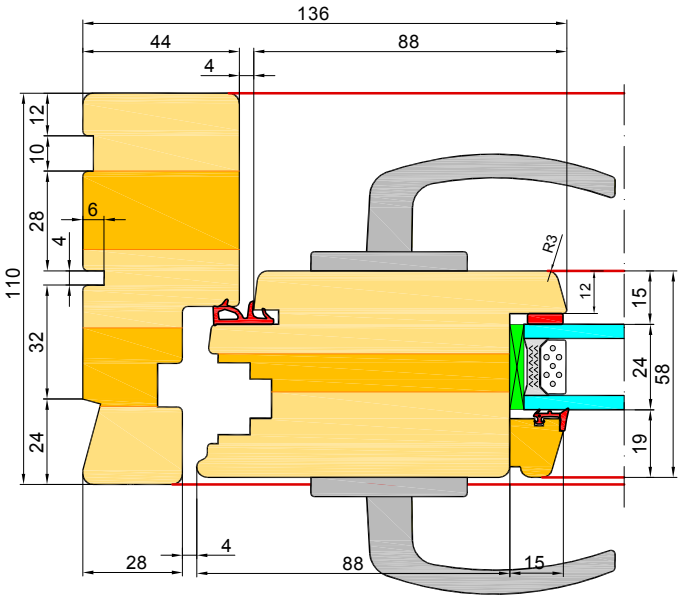

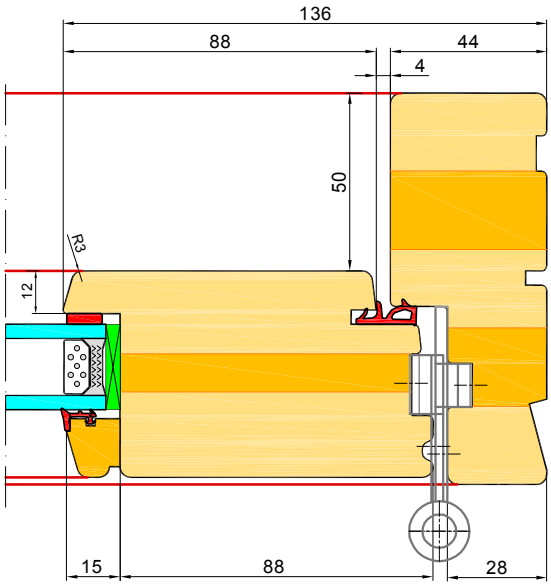

SOKÓŁKA OKNA I DRZWI

EURO - Profile SOFT - DOOR INWARD OPENABLE

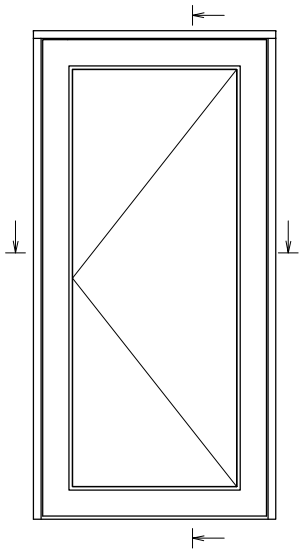

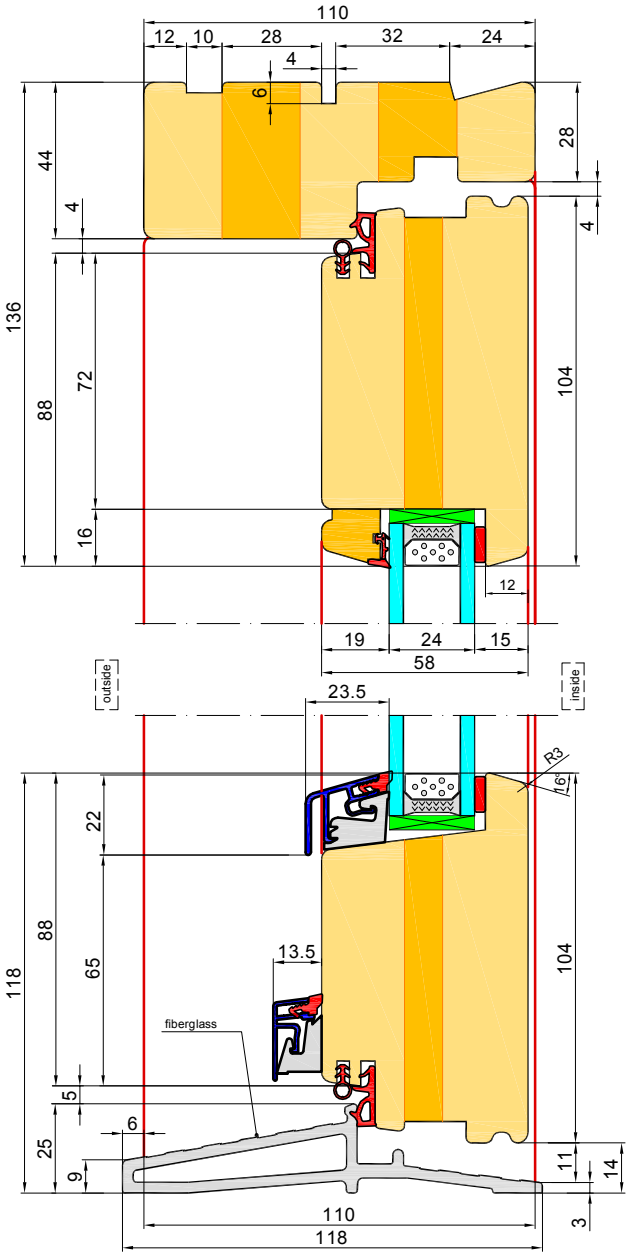

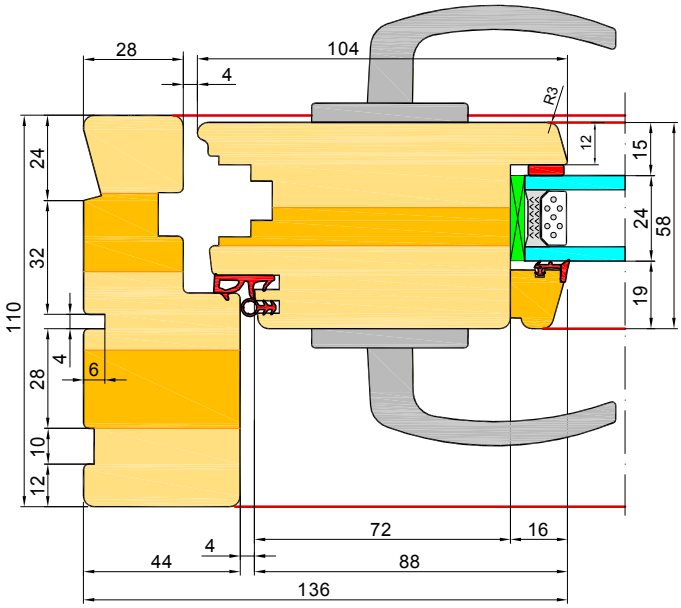

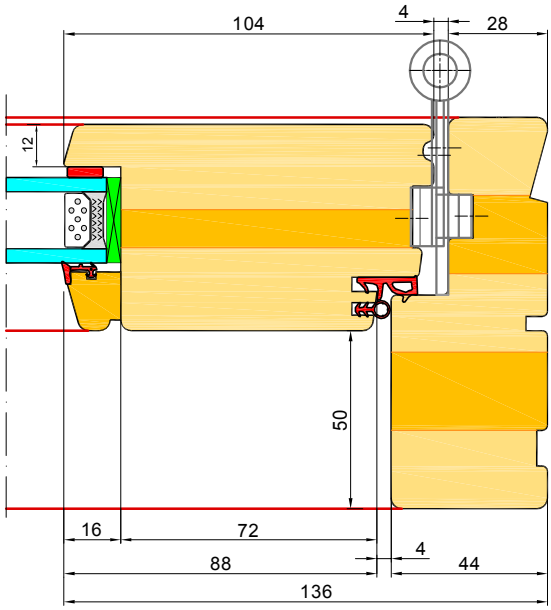

EURO - Profile SOFT - DOOR INWARD OPENABLE

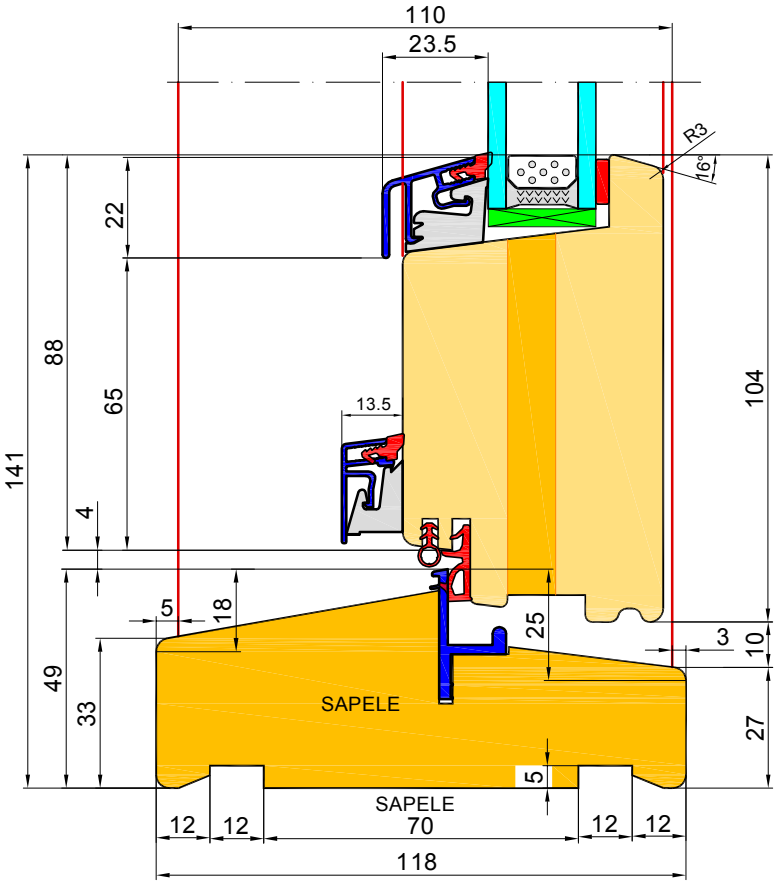

EURO - Profile SOFT - DOOR OUTWARD OPENABLE

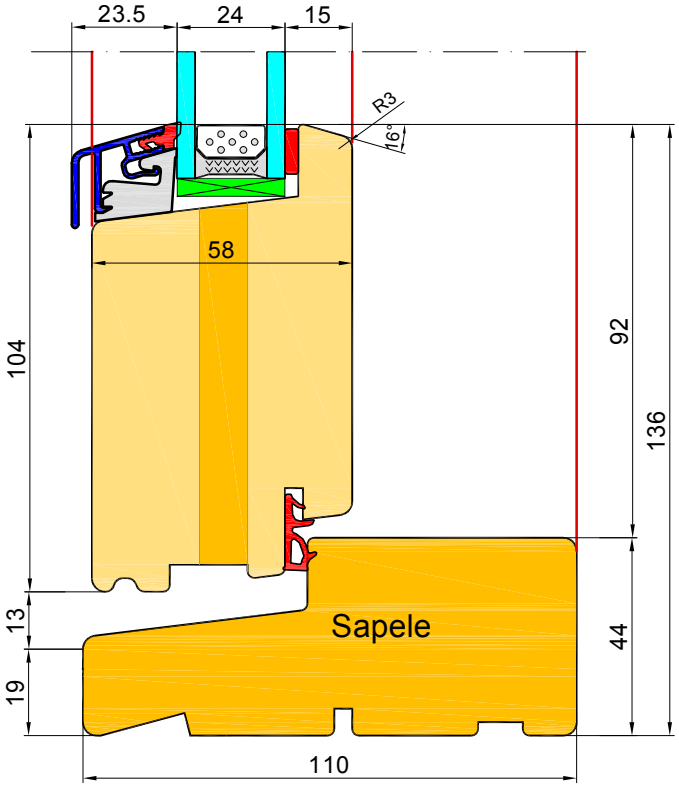

SOKÓŁKA OKNA I DRZWI

EURO - Profile SOFT - DOORS - FLYING MOULION

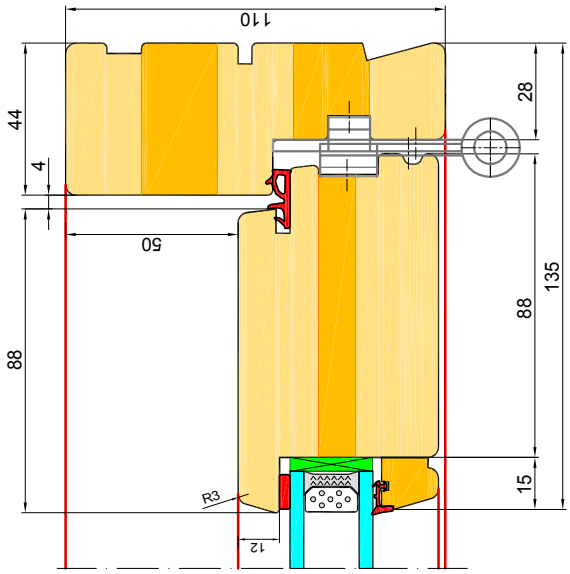

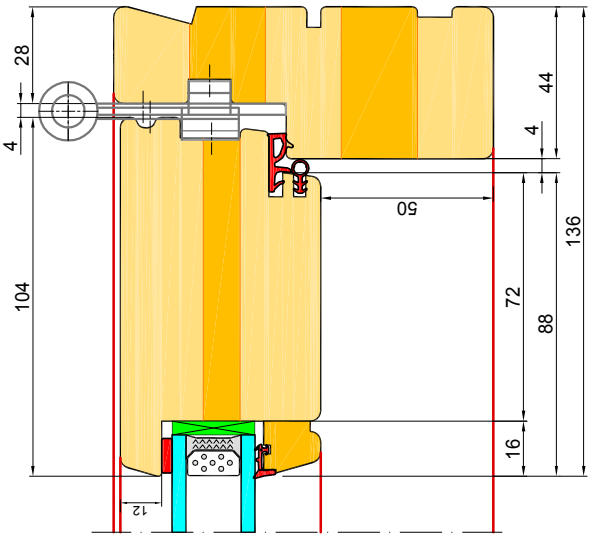

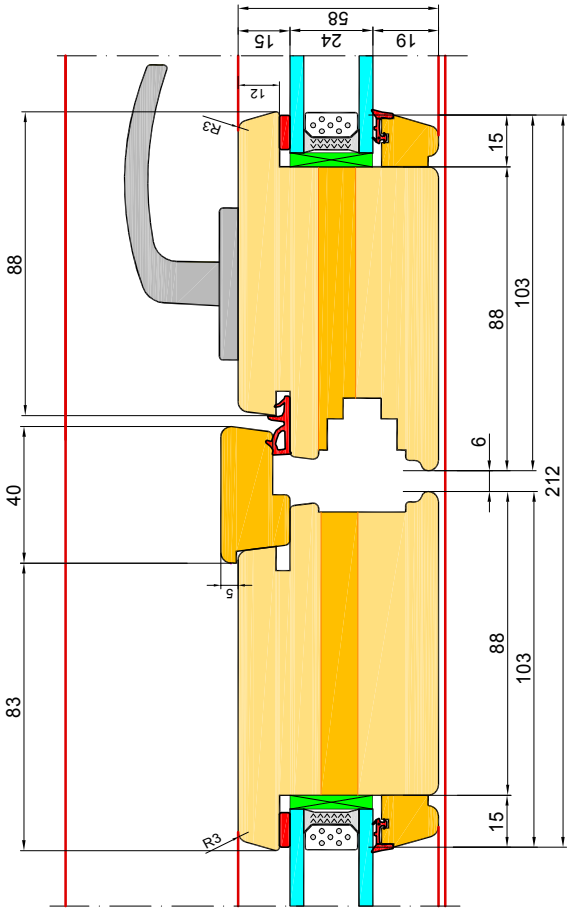

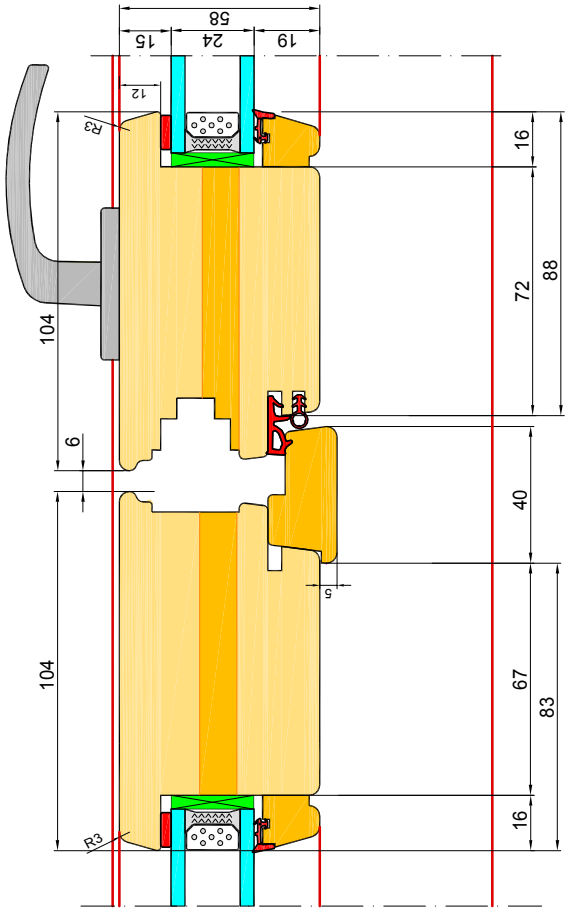

DOOR OUTWARD OPENABLE

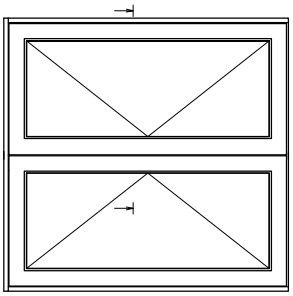

DOOR INWARD OPENABLE

EURO - Profile CLASSIC - DOOR OUTWARD OPENABLE

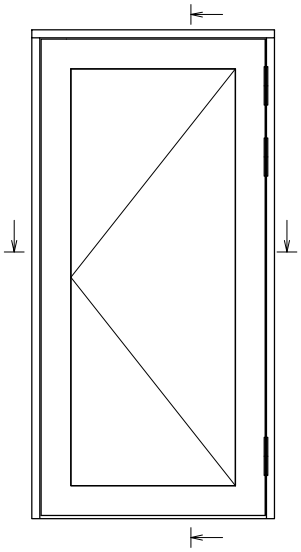

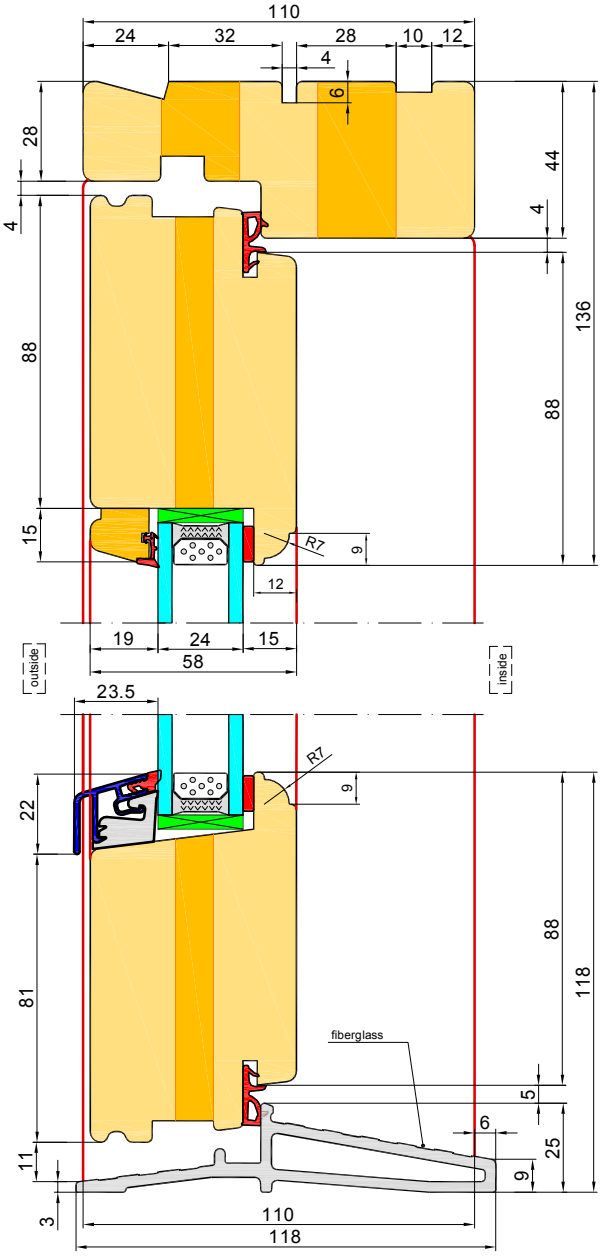

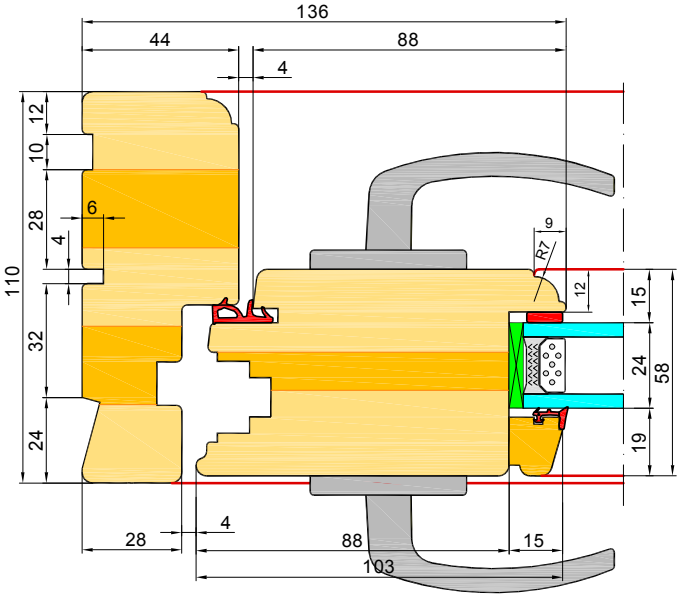

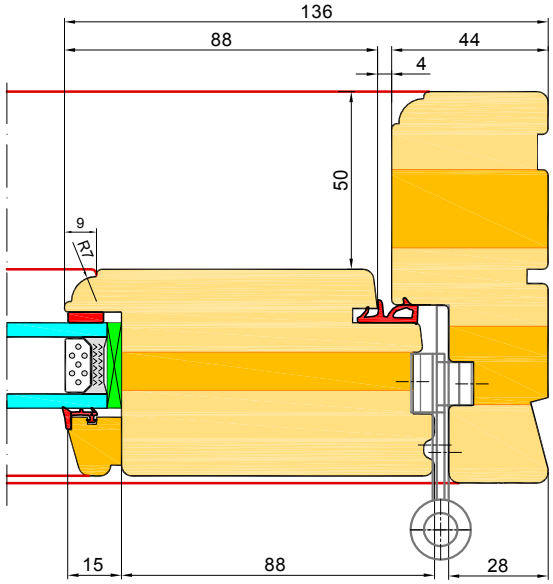

EURO - Profile CLASSIC - DOOR INWARD OPENABLE

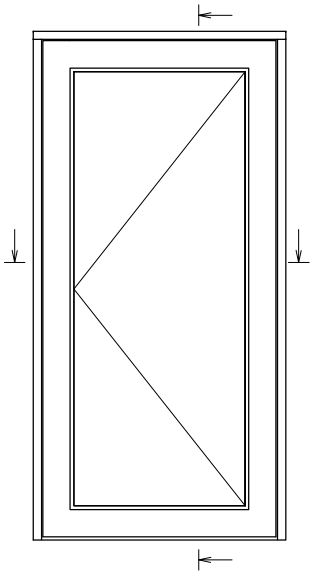

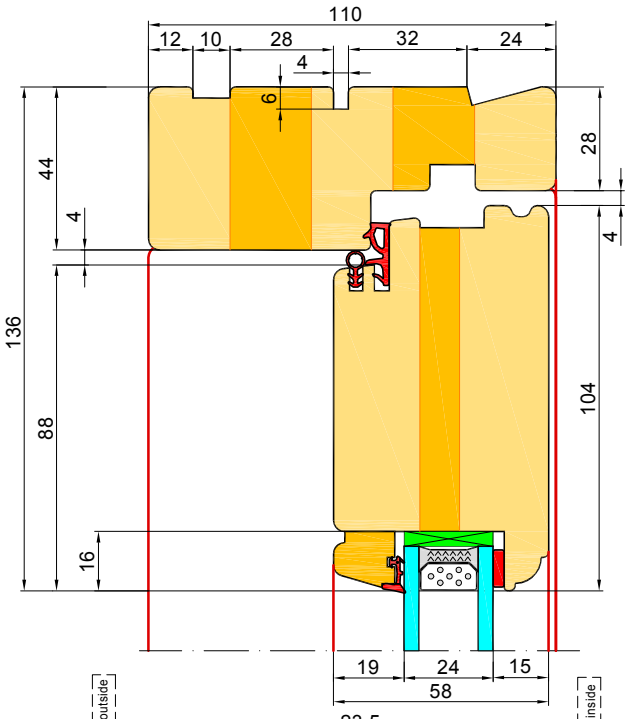

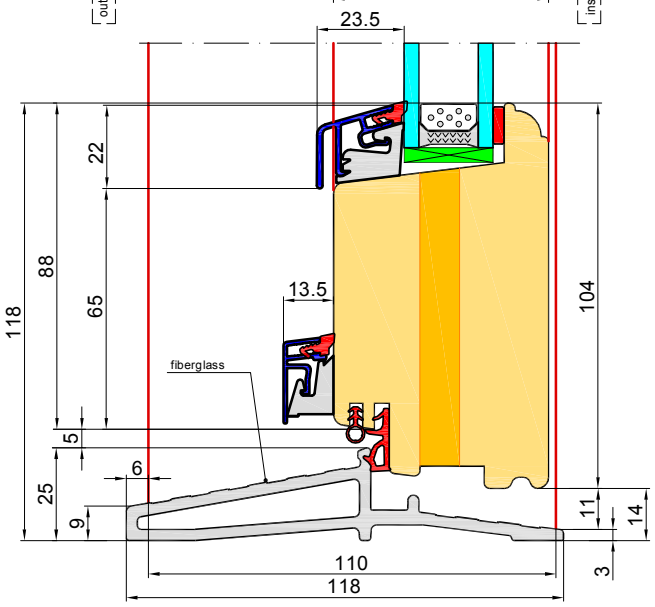

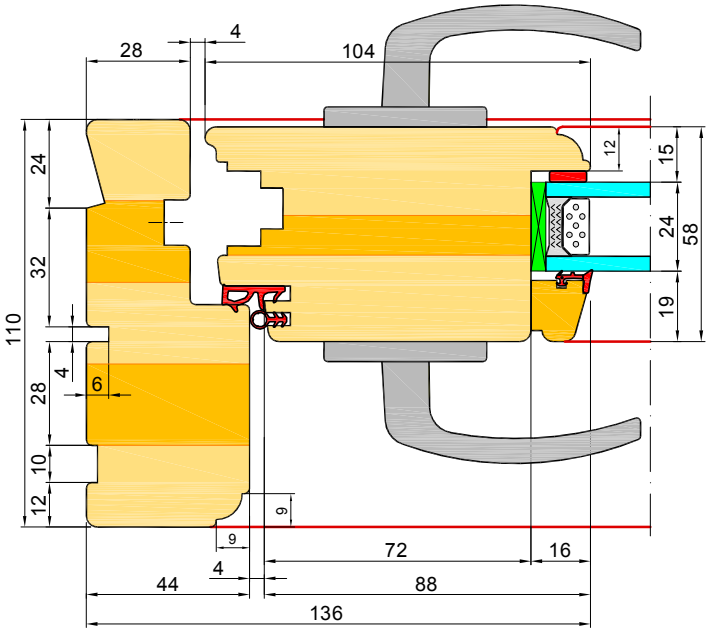

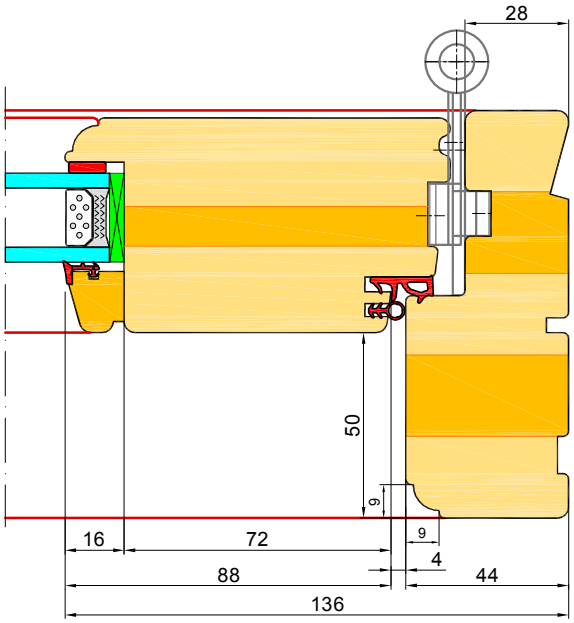

EURO - Profile CLASSIC - DOOR INWARD OPENABLE

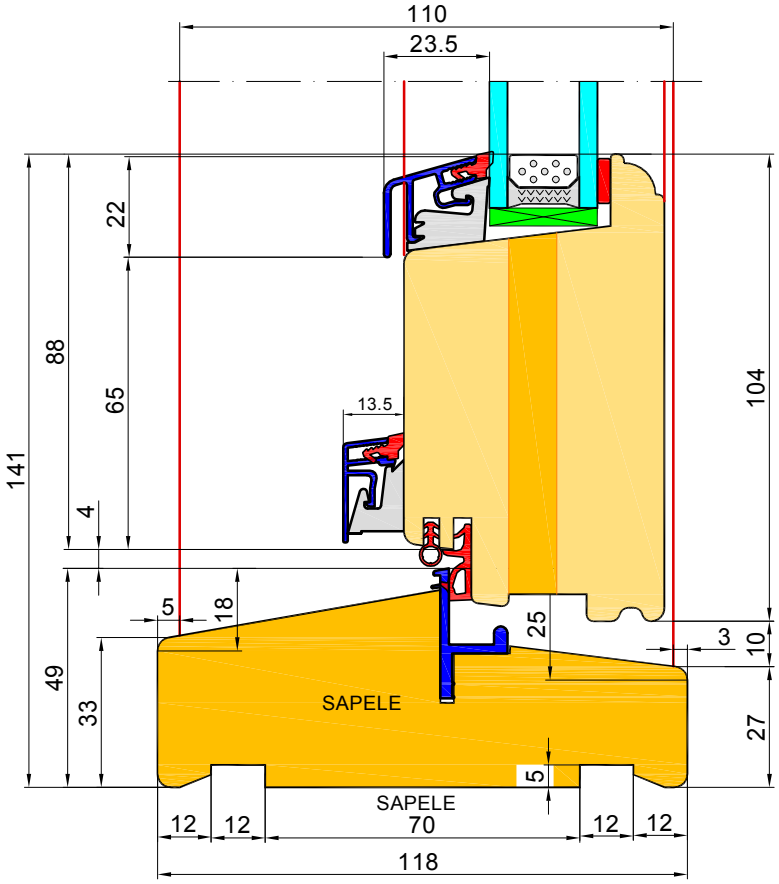

EURO - Profile CLASSIC - DOOR OUTWARD OPENABLE

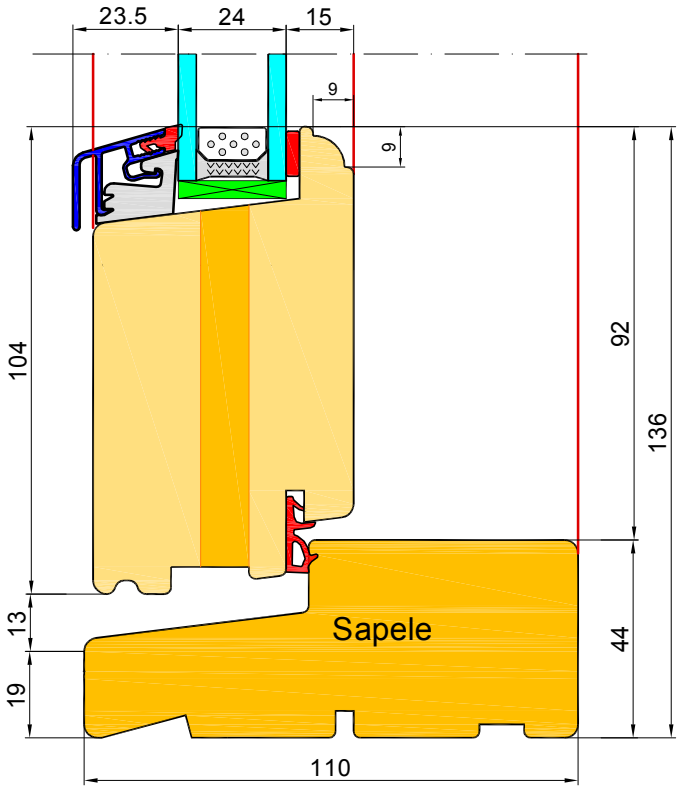

EURO - Profile CLASSIC - DOORS - FLYING MOULION

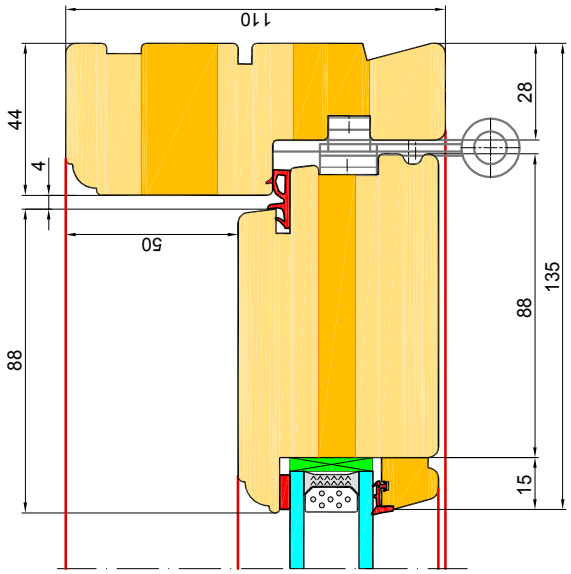

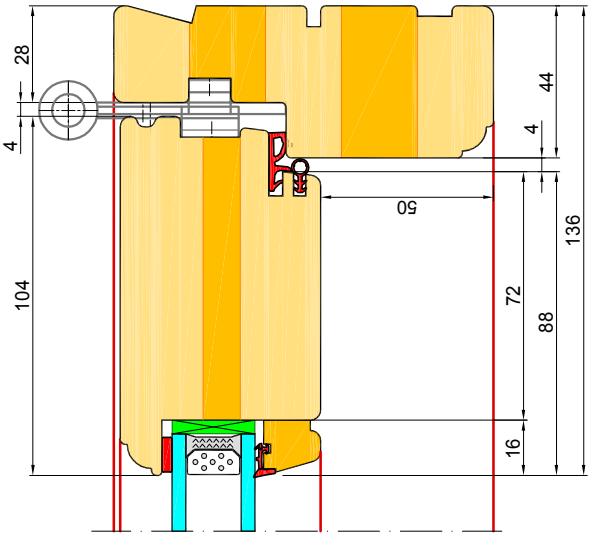

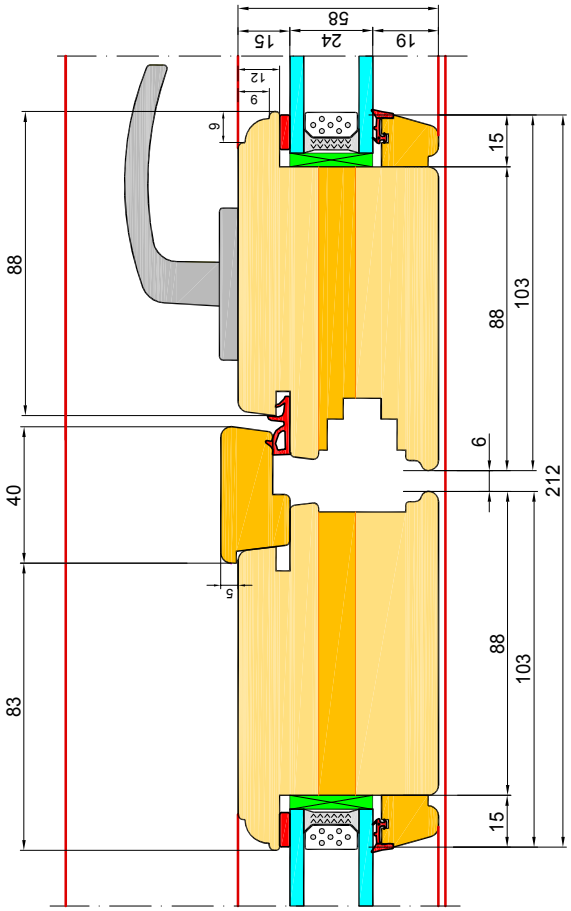

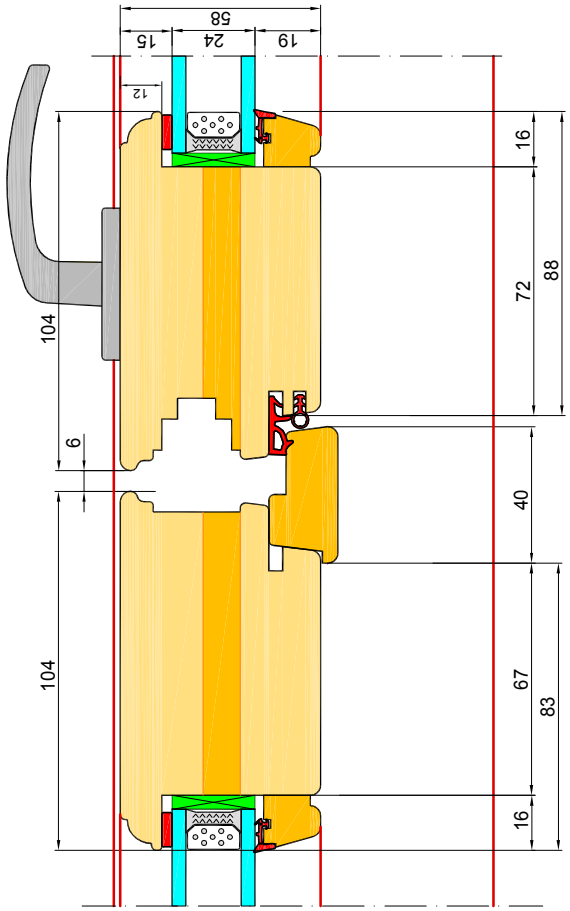

DOOR OUTWARD OPENABLE

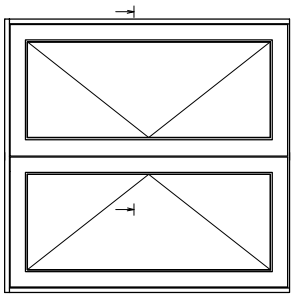

DOOR INWARD OPENABLE

EURO ALU - PROFILE SOFT - DOORS.

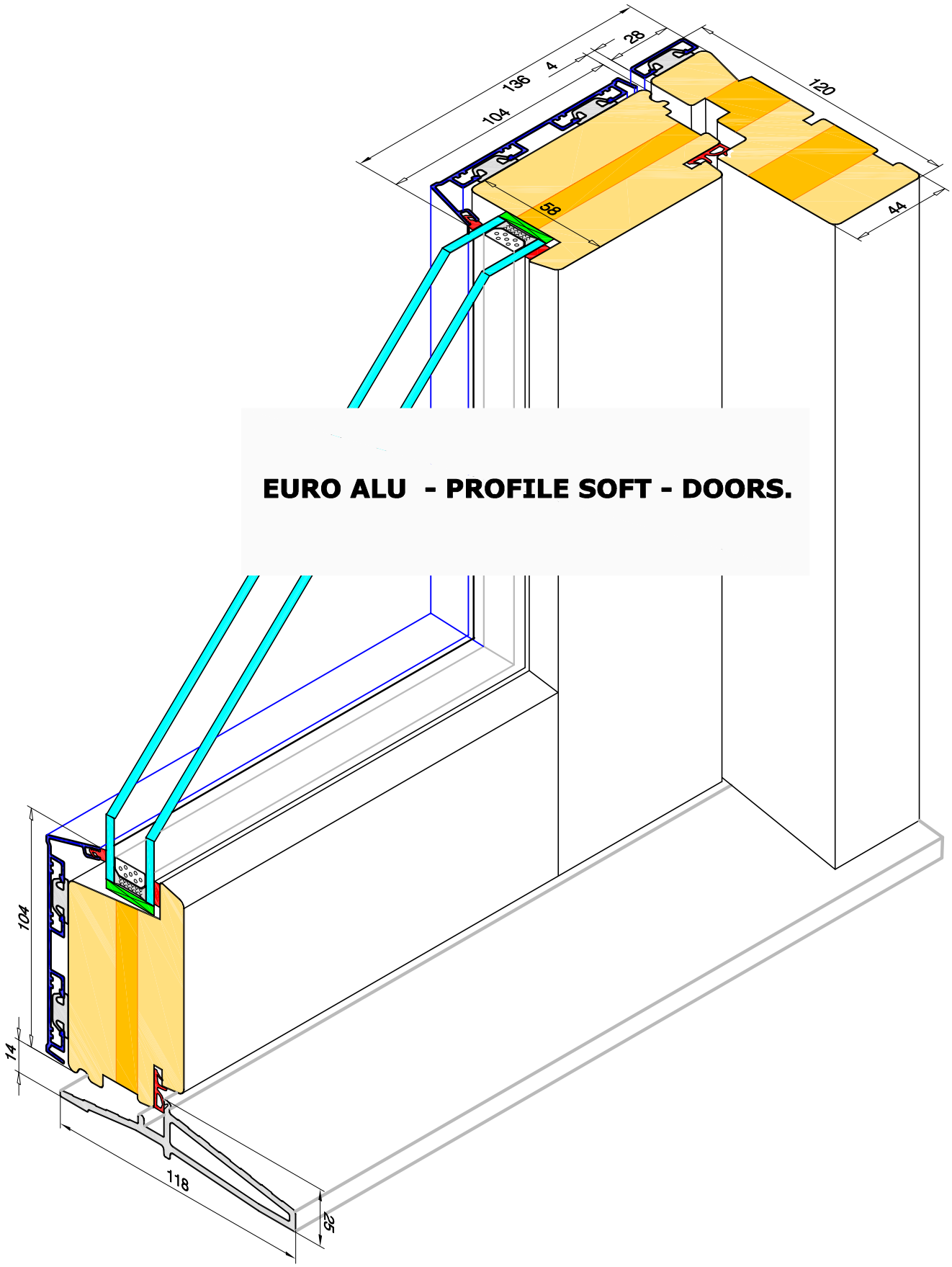

EURO ALU - PROFILE SOFT - DOORS.

SOKÓŁKA OKNA I DRZWI

EURO ALU - Profile SOFT - DOOR OUTWARD OPENABLE. GLASS 24mm.

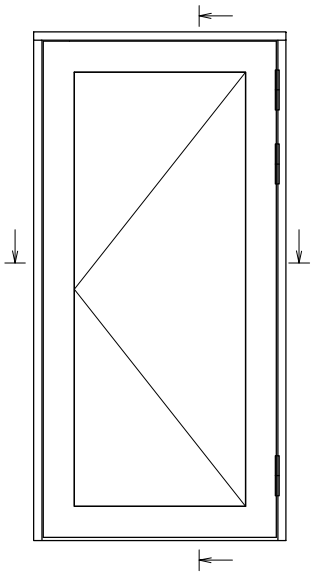

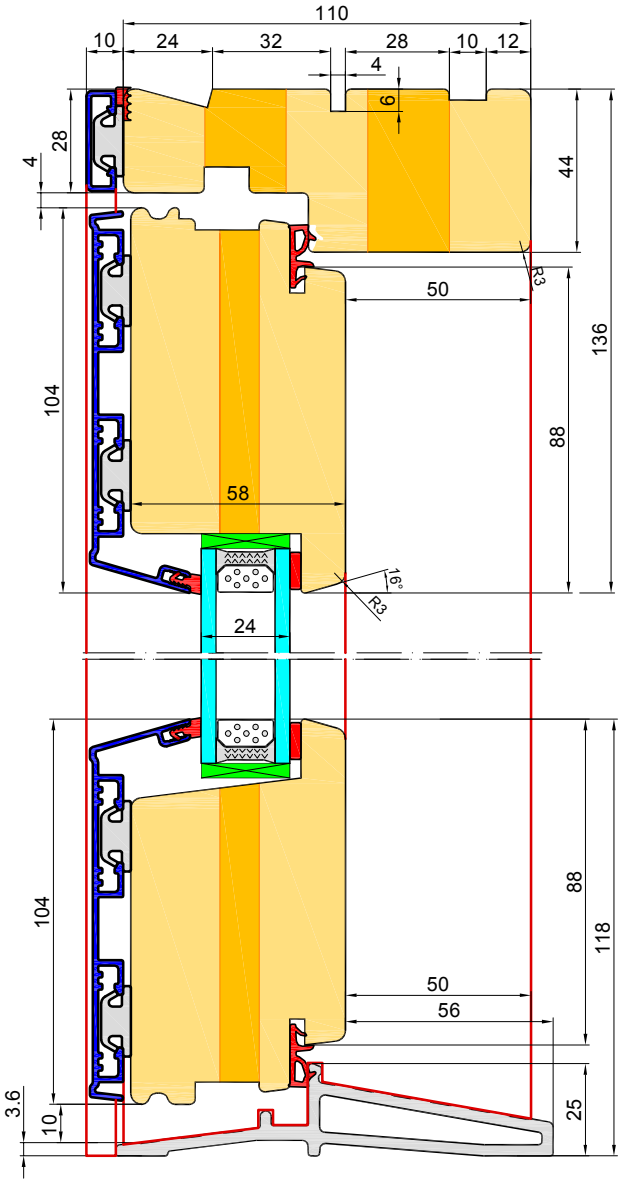

Threshold fiberglass

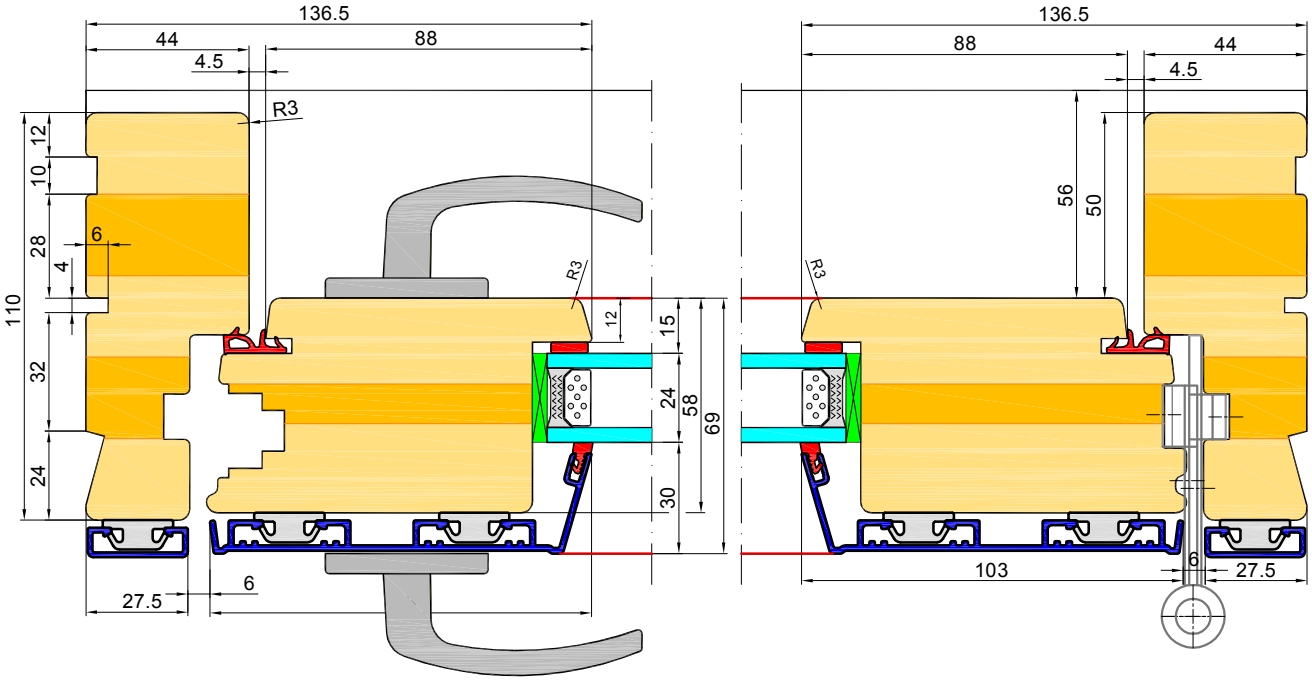

EURO ALU - Profile SOFT - DOOR INWARD OPENABLE. GLASS 24mm.

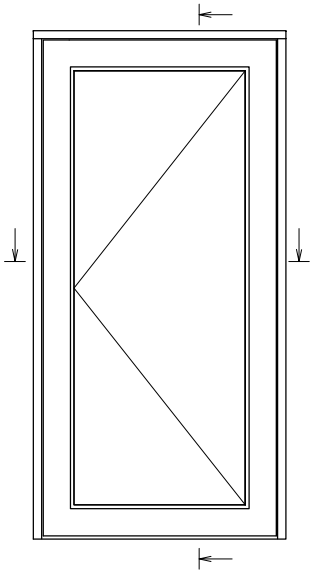

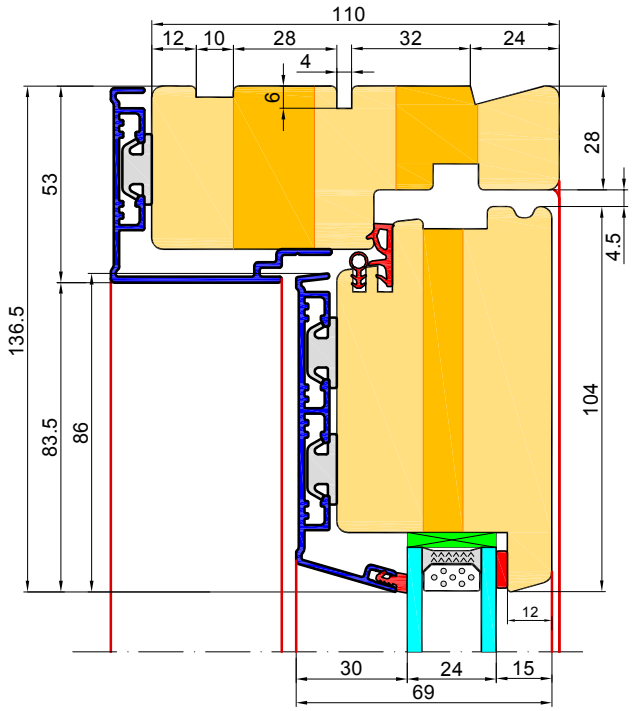

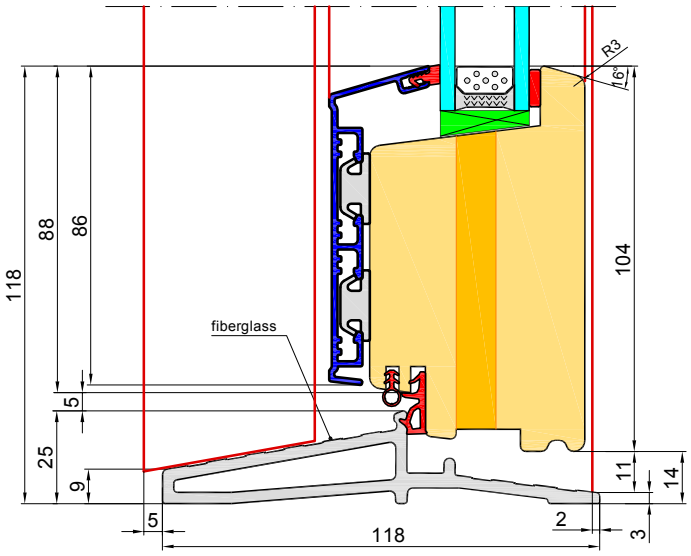

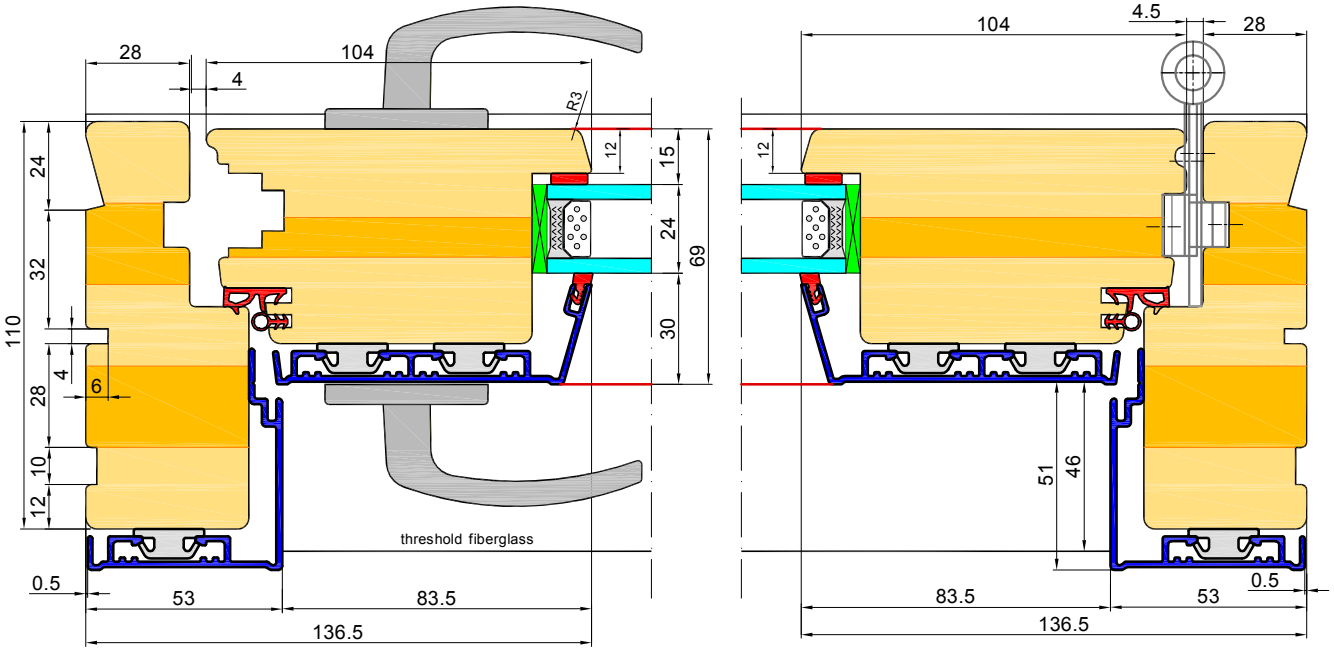

EURO ALU - Profile SOFT - DOOR INWARD OPENABLE

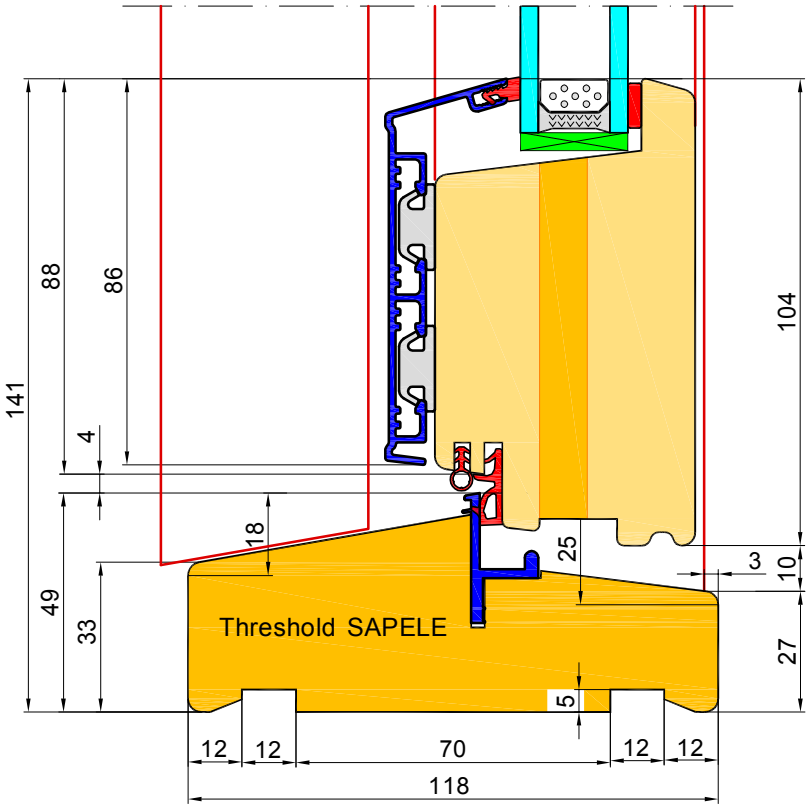

EURO ALU - Profile SOFT - DOOR OUTWARD OPENABLE

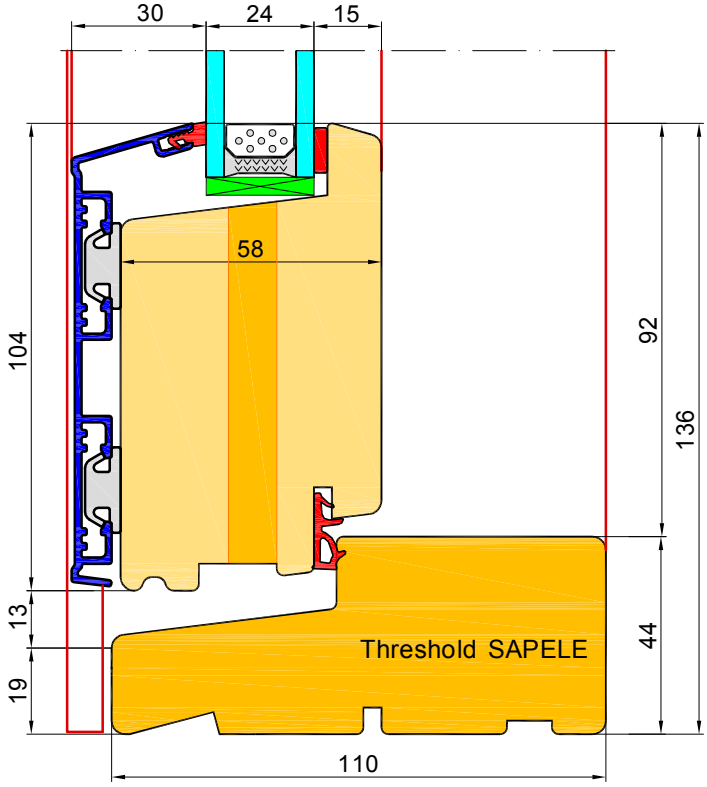

SOKÓŁKA OKNA I DRZWI

EURO ALU - Profile SOFT - DOORS - FLYING MOULION. GLASS 24mm.

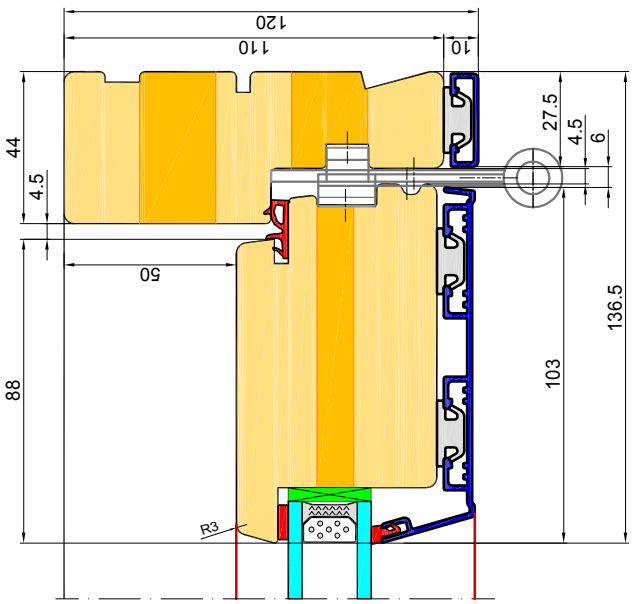

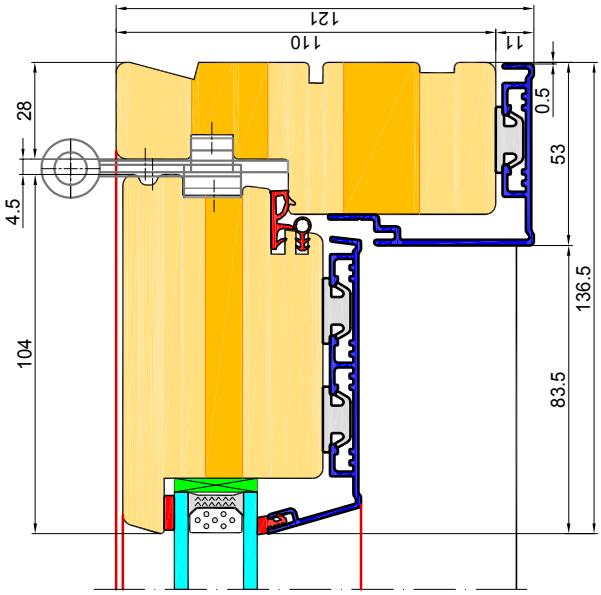

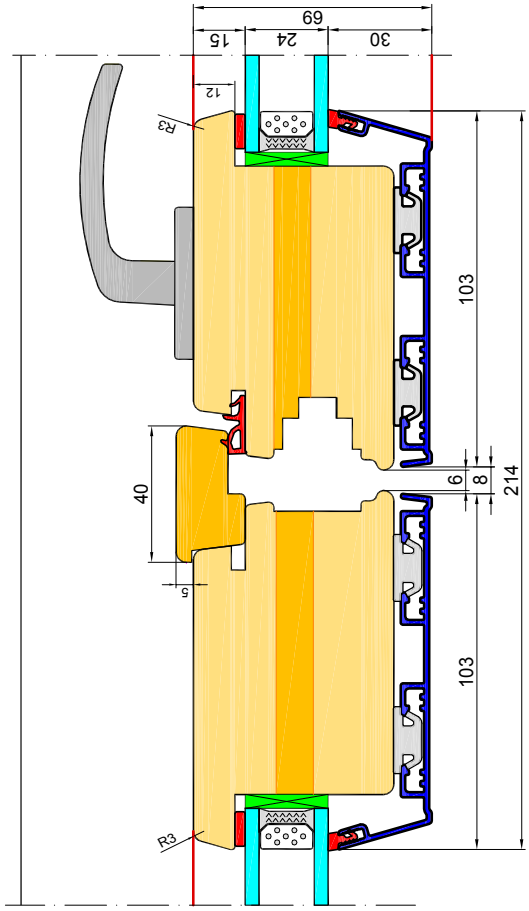

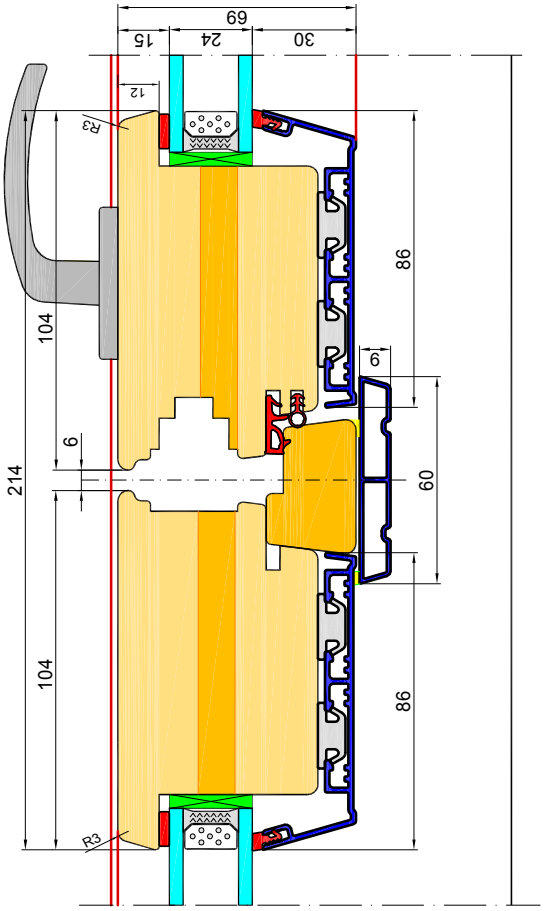

DOOR OUTWARD OPENABLE

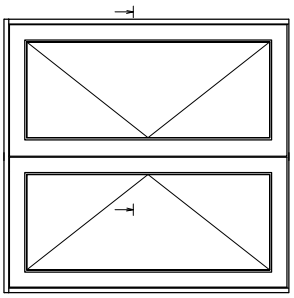

DOOR INWARD OPENABLE

SOKÓŁKA OKNA I DRZWI

EURO ALU - Profile SOFT - DOOR OUTWARD OPENABLE. Glass 40mm.

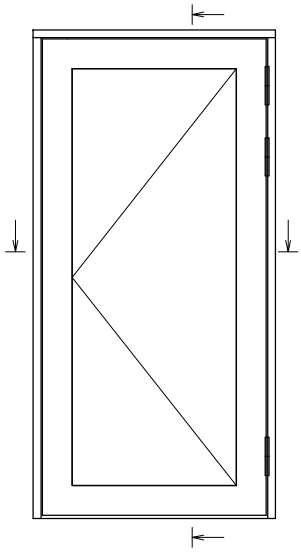

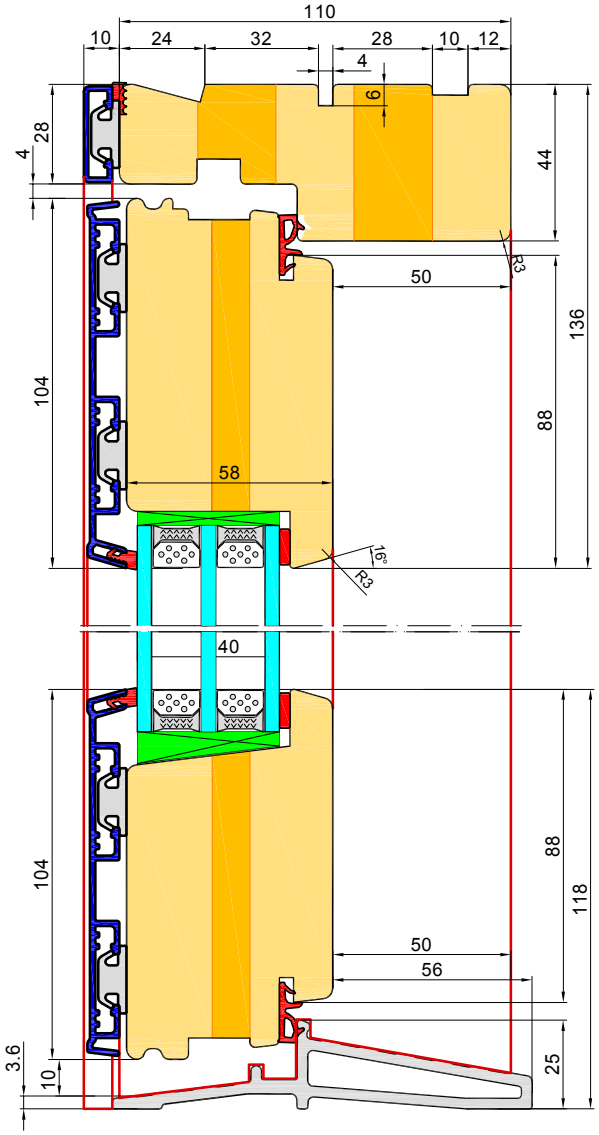

Threshold fiberglass

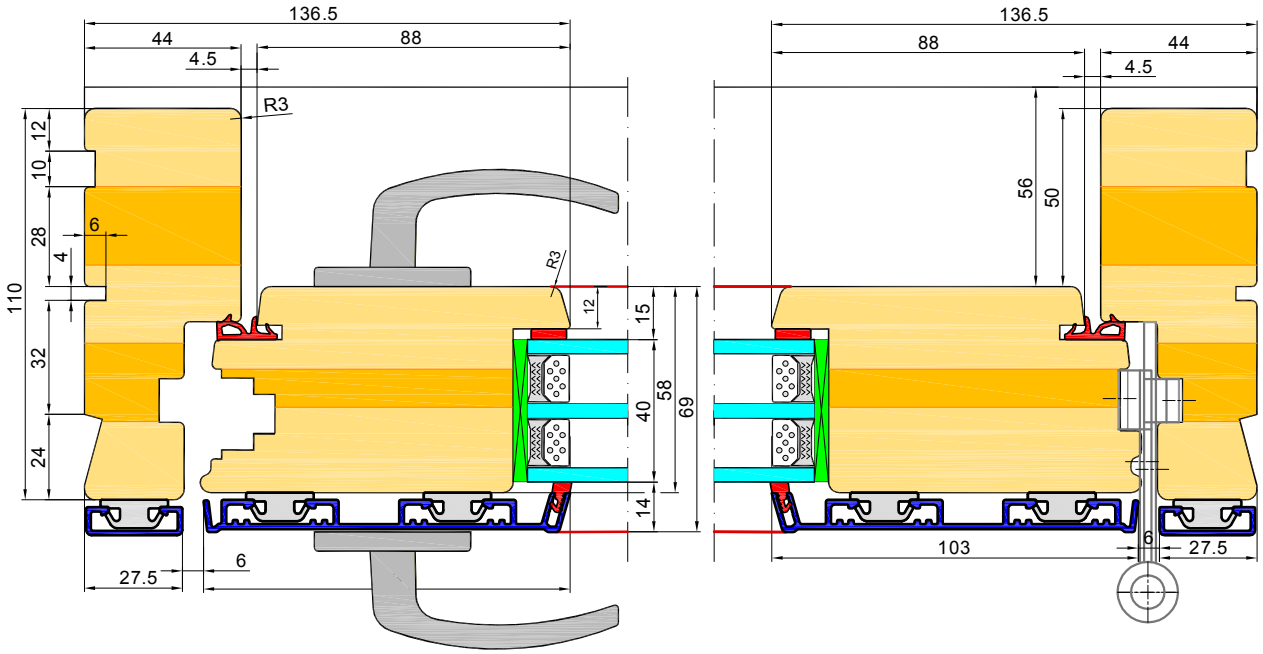

EURO ALU - Profile SOFT - DOOR INWARD OPENABLE. GLASS 40mm.

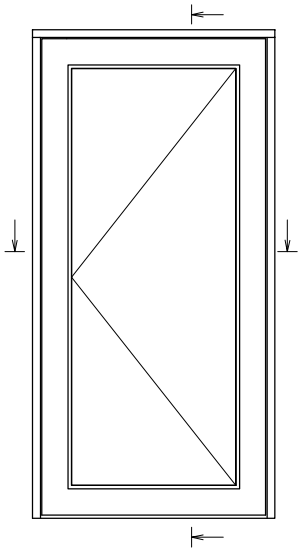

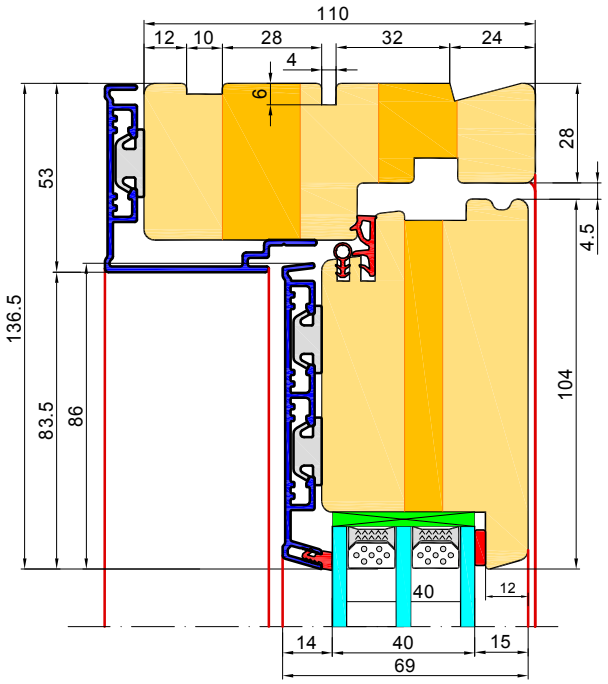

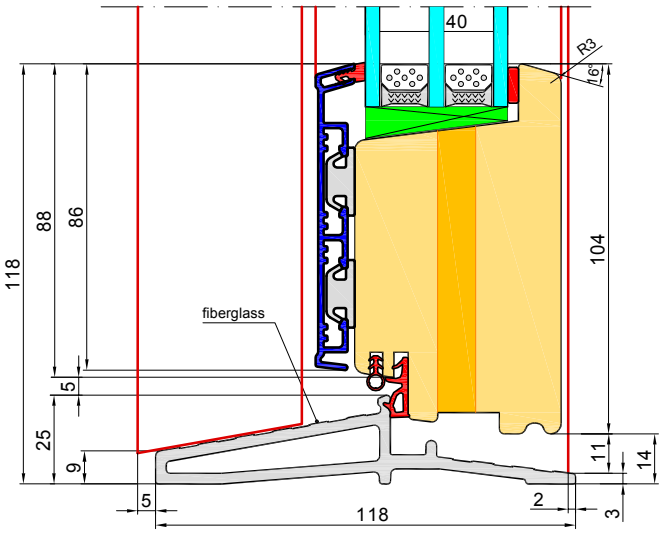

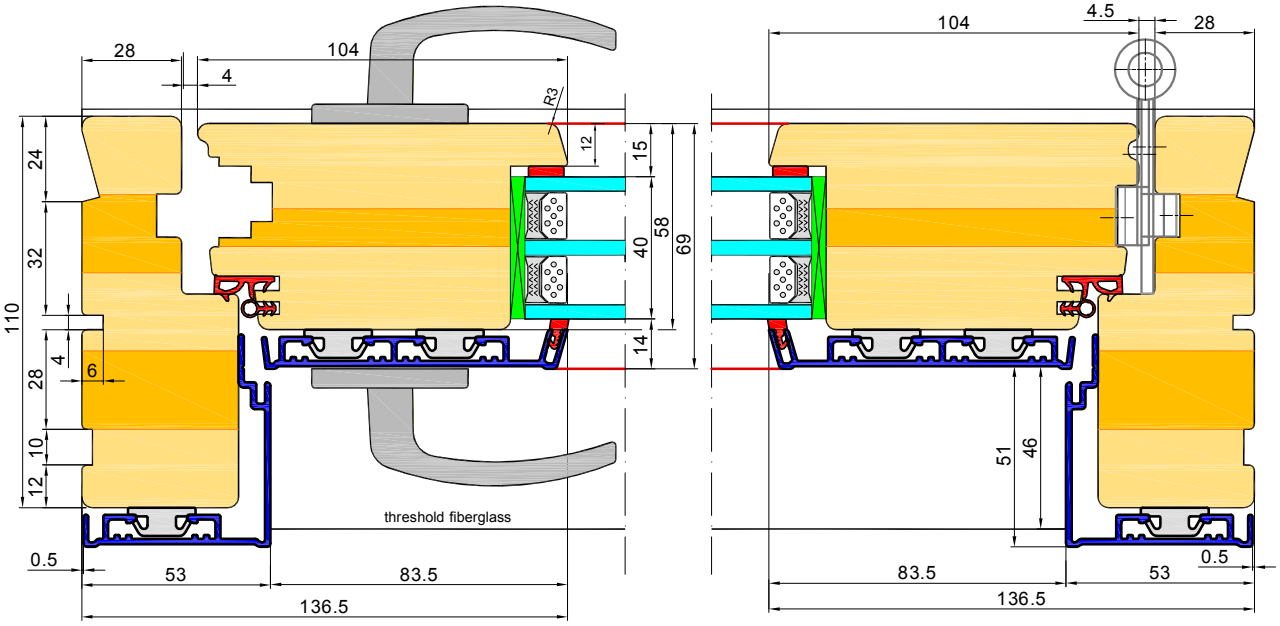

EURO ALU - Profile SOFT - DOOR INWARD OPENABLE

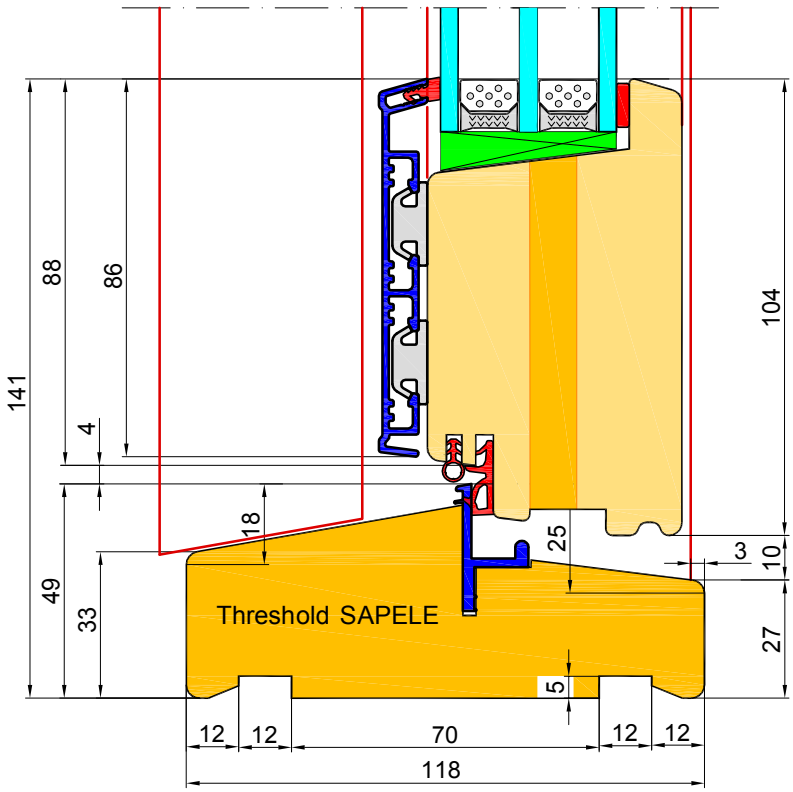

EURO ALU - Profile SOFT - DOOR OUTWARD OPENABLE

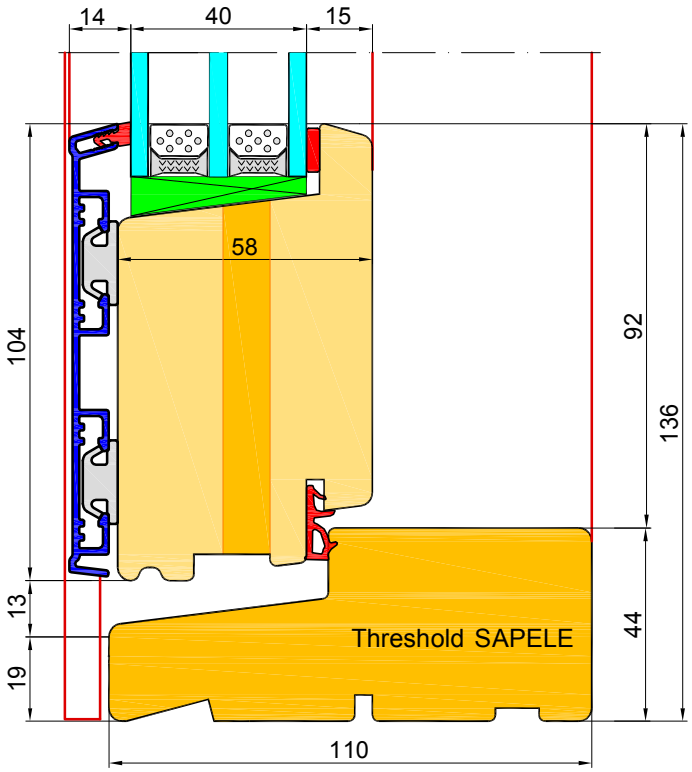

EURO ALU - Profile SOFT - DOORS - FLYING MOULION. GLASS 40mm.

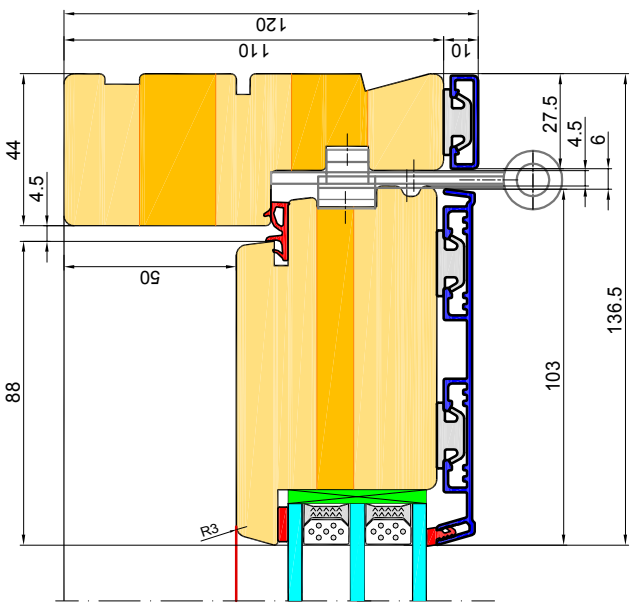

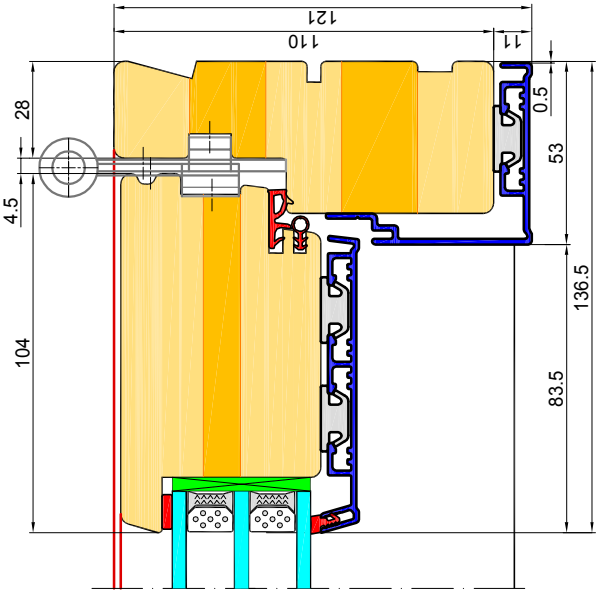

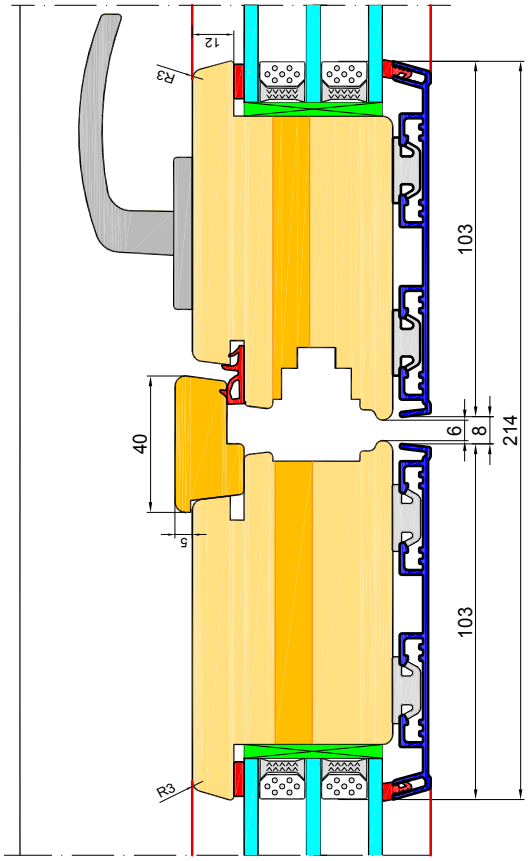

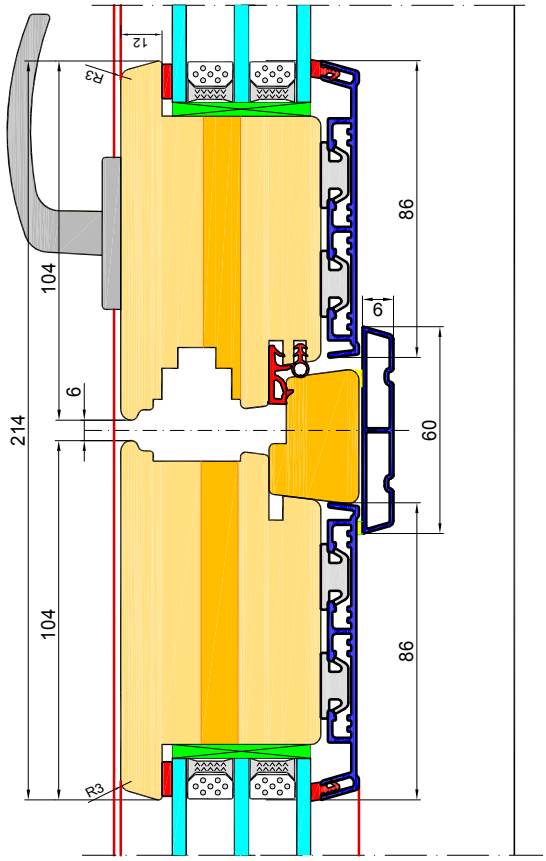

DOOR OUTWARD OPENABLE

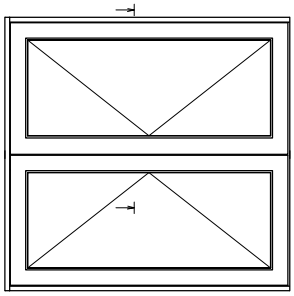

DOOR INWARD OPENABLE

SOKÓŁKA OKNA I DRZWI

EURO ALU - 2-colour

Doors

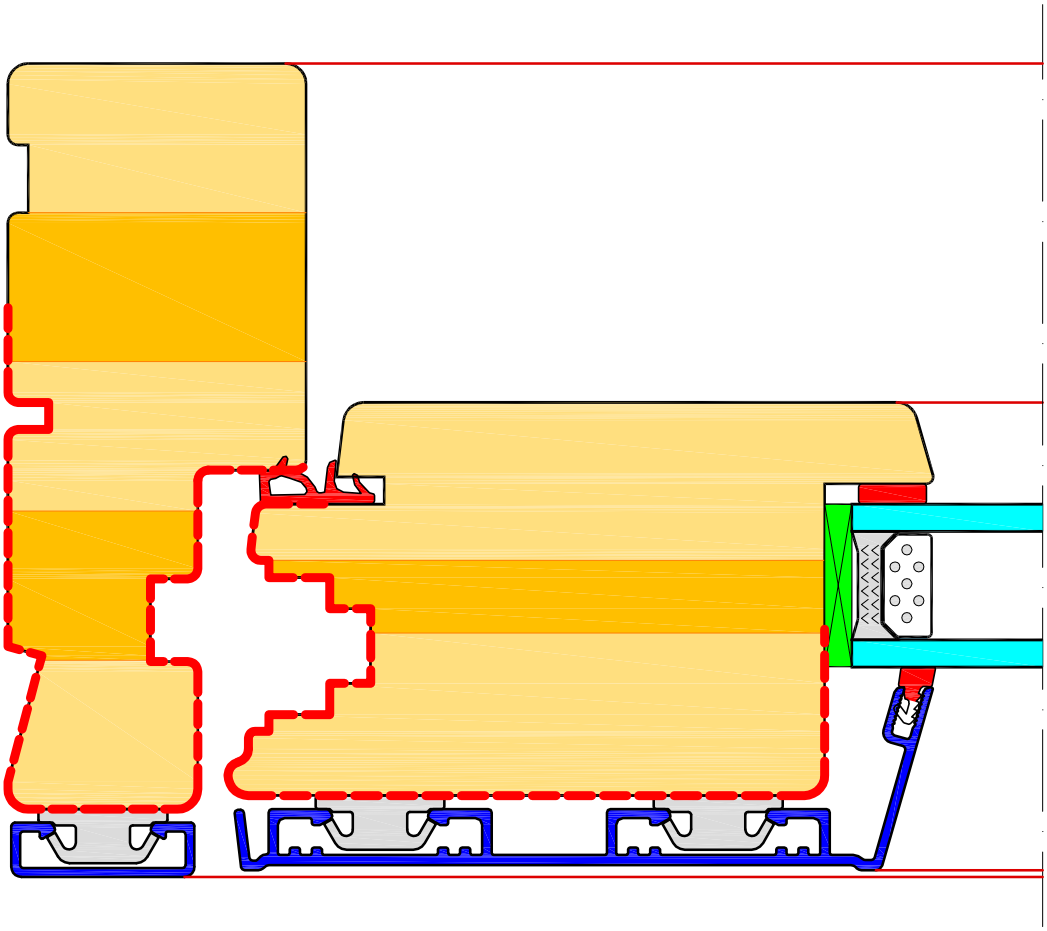

Windows

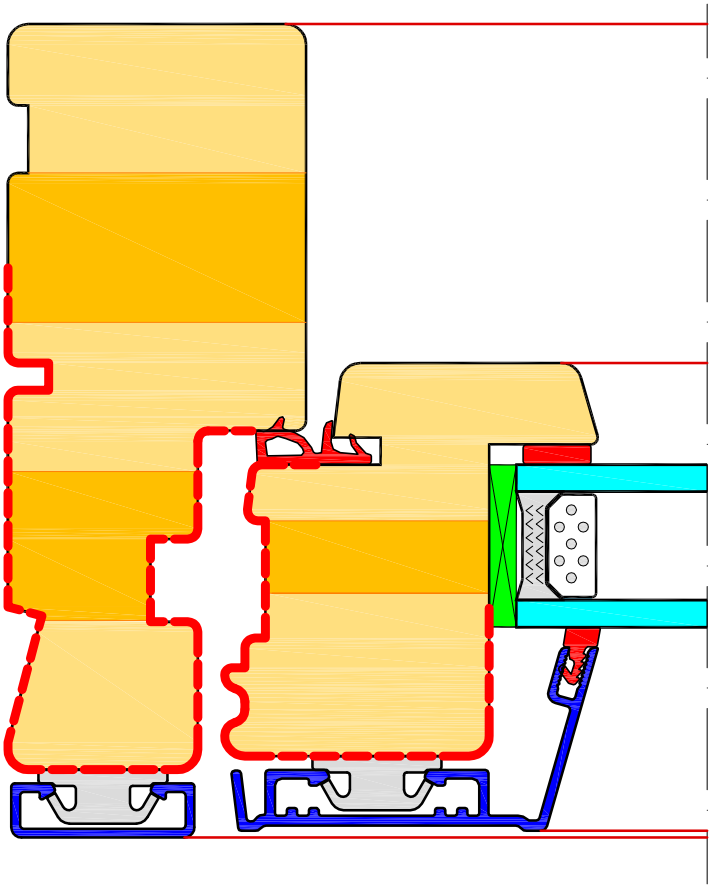

EURO ALU - connections

ELITE 92 ALU FIX — DOOR OUTWARD OPENABLE

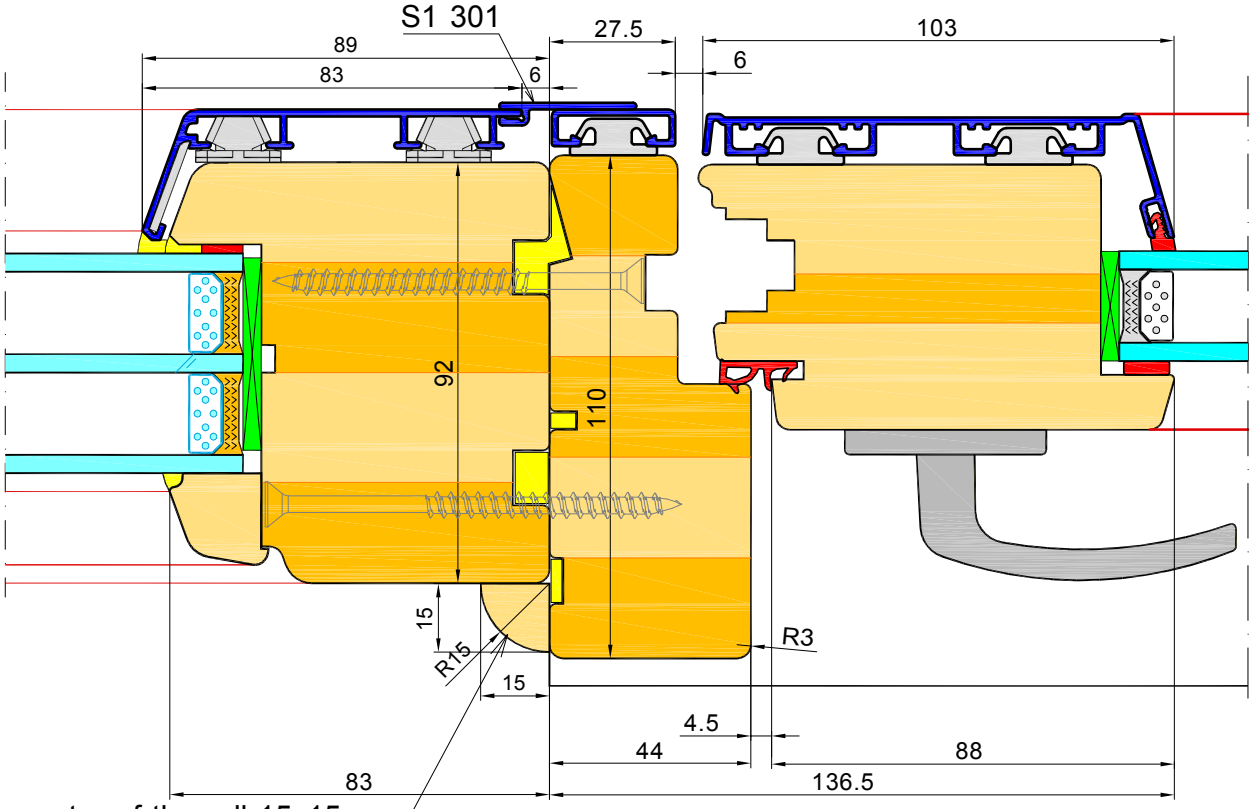

the quarter of the roll 15x15mm

ELITE 92 ALU FIX — DOOR INWARD OPENABLE

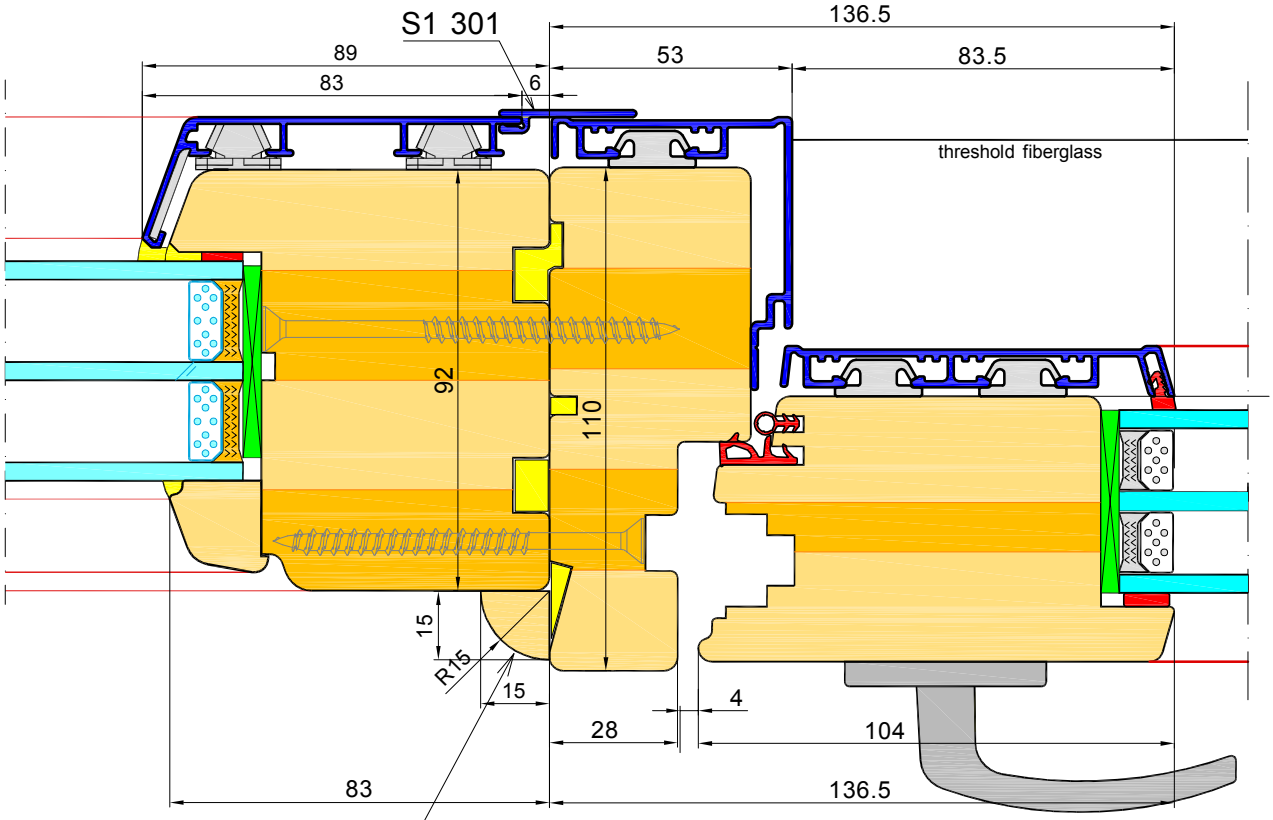

the quarter of the roll 15x15mm